Instrumentation Amplifier

Dylan Thornburg and Idrees Al-Khalidi

Topology

- Contains three op-amps: Two non-inverting amplifiers that connect to both inputs of 1 differential amplifier

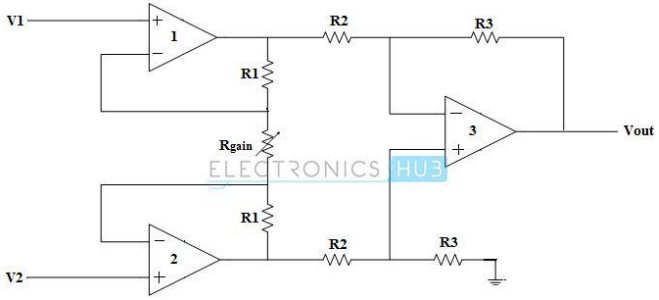

A Typical Three Op-amp Instrumentation Amplifier

Topology

- The negative feedback of the two op amps to the left leads to the voltage at points G and H to be equal to the input voltages V_1 and V_2, respectively.
- The voltages from points G and H create a current that flows through R_{gain} and both R_1 resistors
- The differential output voltage from the two non-inverting amplifiers on the left side can be written as $(V_{o,1} - V_{o,2}) = (2R_1 + R_{gain})(V_1-V_2)/R_{gain}$ and the differential amplifier's output can be written as $V_{out} = (R_3/R_2)(V_{o,1}-V_{o,2})$

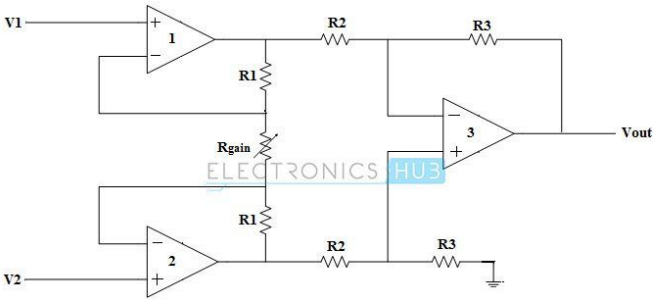

A Typical Three Op-amp Instrumentation Amplifier

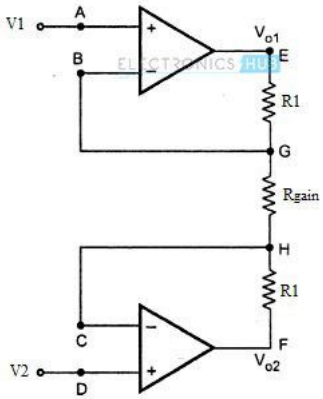

Input Stage of Instrumentation Amplifier

Topology

- Combining both equations: $V_{out} = (R_3/R_2)[(2R_1 + R_{gain})/R_{gain}](V_1-V_2)$
- Gain = A_v $= (R_3/R_2)((2R_1 + R_{gain})/R_{gain})$
- If all of the resistors besides R_{gain} are the same value R: $V_{out} = (V_1-V_2)(1+2R/R_{gain})$

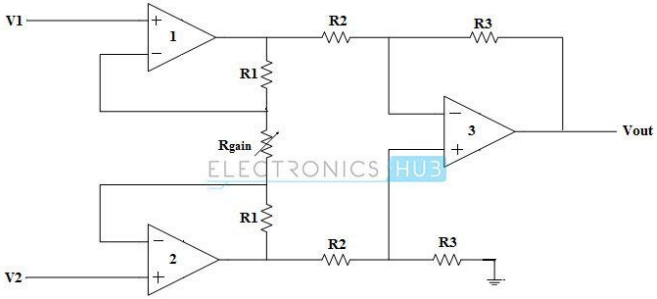

A Typical Three Op-amp Instrumentation Amplifier

Advantages

- Gain can be adjusted by varying one resistance value: R_{gain}
- The input impedance is determined by the inputs of the two non-inverting amplifiers, which have high input impedance while having the low output impedance of a differential amplifier
- High CMRR

Applications

- By implementing a transducer bridge at the input of both non-inverting amplifiers, can be used as a data acquisition device for measuring data such as temperature and light
- A resistive bridge is balanced at a specific temperature, resulting in an equal voltage to both inputs of the non-inverting amplifiers. When the temperature changes, the thermistor’s resistance changes, resulting in a nonzero differential input voltage, which causes the temperature controller to turn on to adjust the temperature to balance the resistive bridge once again. The resistive bridge is balanced when Va and Vb have an equal voltage

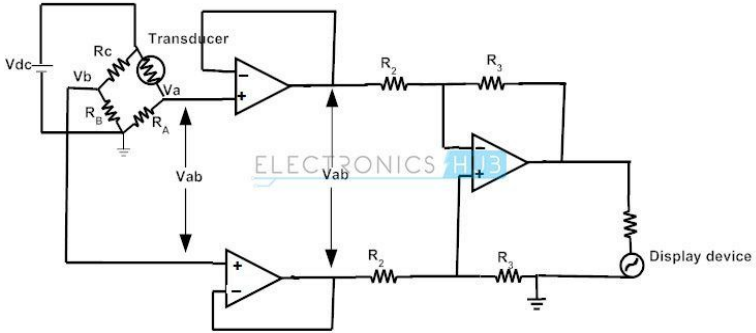

Applications

- This same system layout can be used for a light detector, by using a light-dependent resistor (LDR) instead of a thermistor. The resistive bridge is balanced when there is no light shined on it.
- Biomedical devices that require high input impedance, such as blood pressure monitors and ultrasound devices
    - Also, instrumentation amplifiers are useful for blocking the large amount of noise that is present in hospitals due to the amount of electrical systems being used in the building from lights, medical devices, computers, etc.

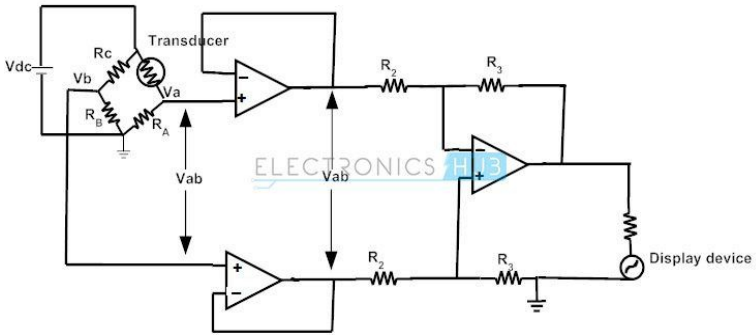

Ways to test performance

- 1) CMRR = common mode rejection ratio = ability to reject common-mode signal
- 2) Nonlinearity: The graph of V_{in} vs (V_{out}/Gain) can be nonlinear (shown to the right)
- 3) Slew Rate: slope of V_{out} vs. V_{in}

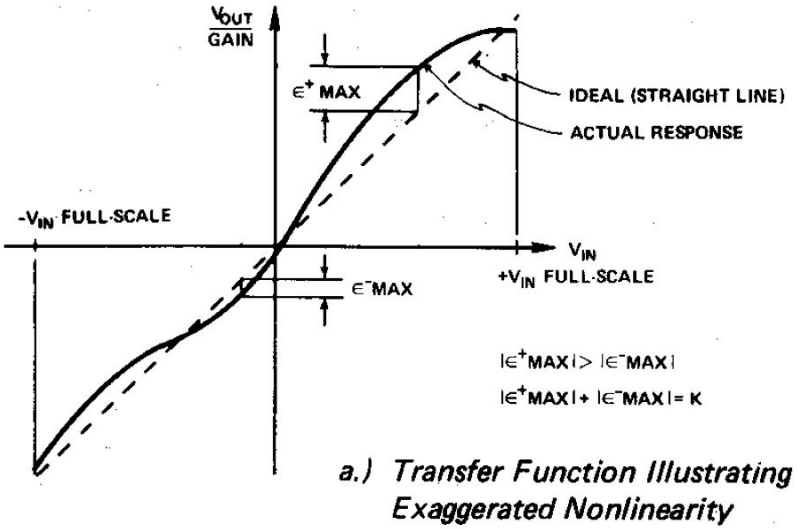

a.) Transfer Function Illustrating Exaggerated Nonlinearity

Op-Amp Schematic and Symbol

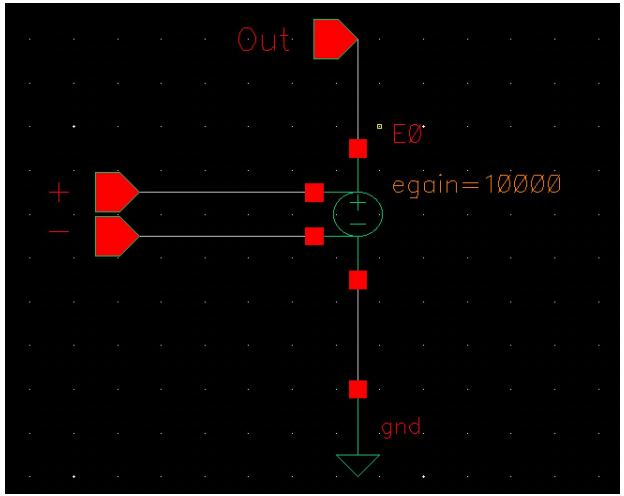

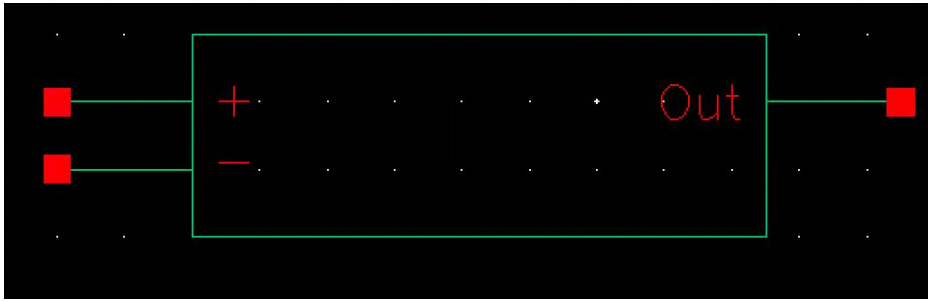

Instrumentation Amplifier Schematic

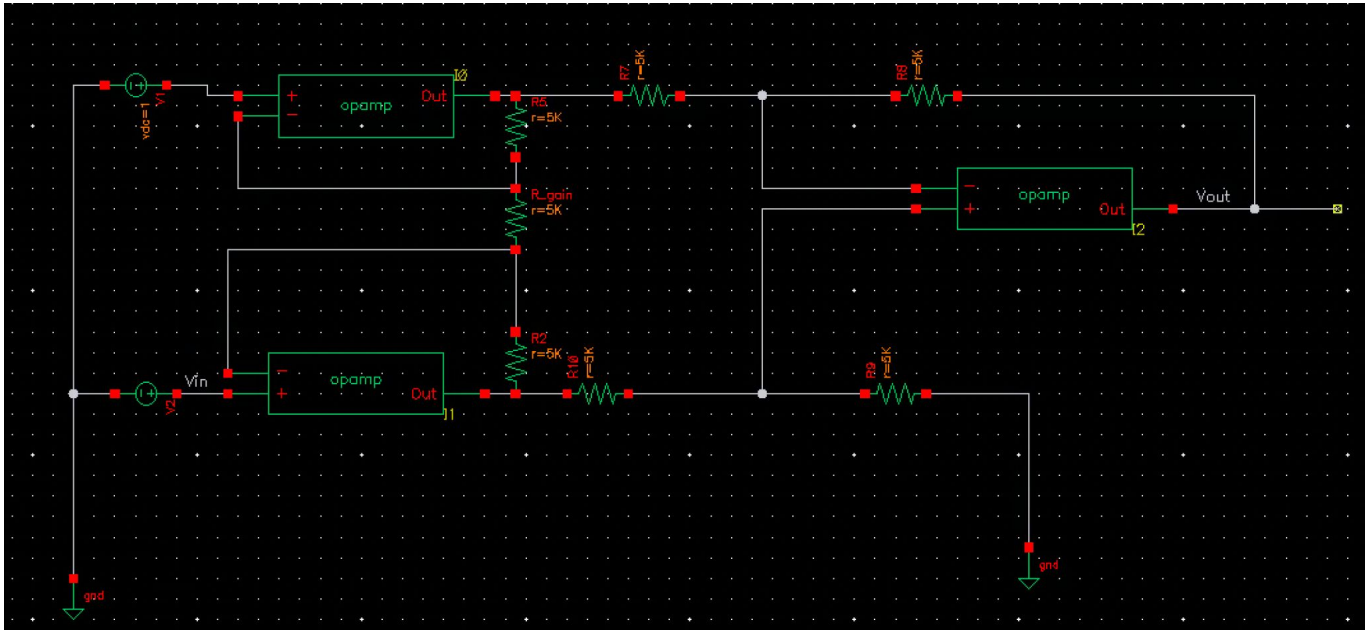

Testing differential-mode gain

1 input held to 1 V while the other input is swept from 1 V to 5 V.

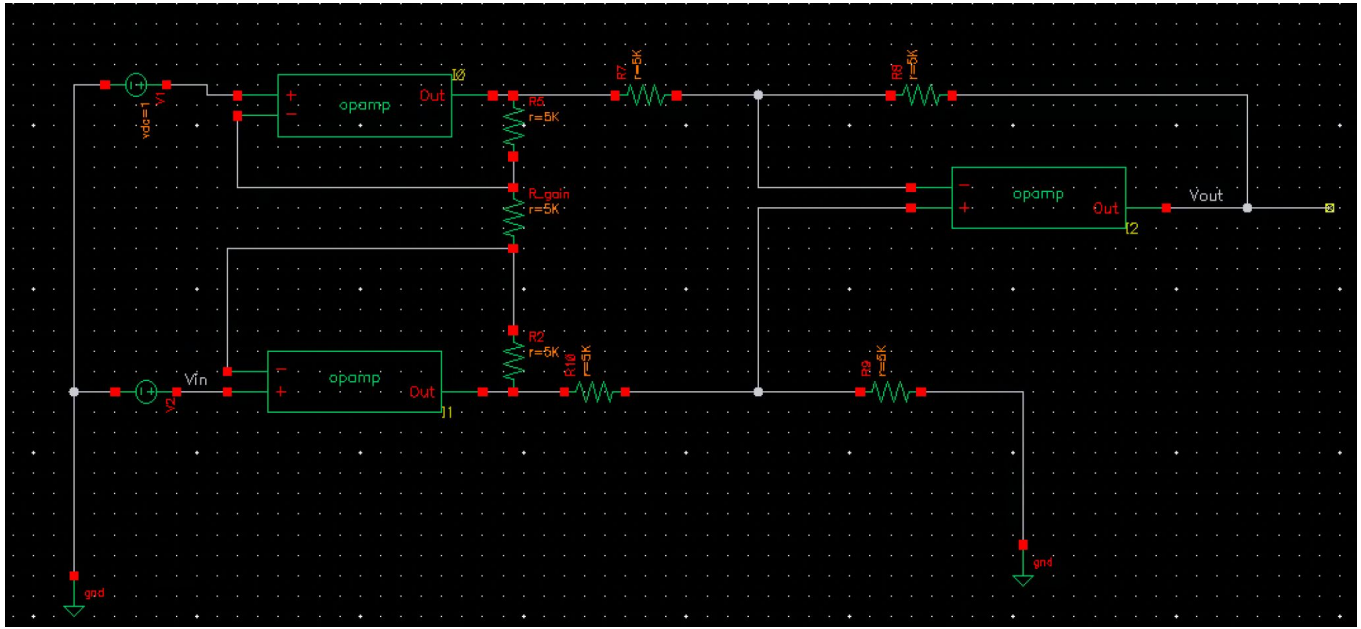

Testing differential-mode gain

- 1 input held to 1 V while the other input is swept from 1 V to 5 V and R_gain = R
- $V_{out} = (V_1 - V_2)(1+2R/R_{gain}) = (V_1 - V_2)(3)$

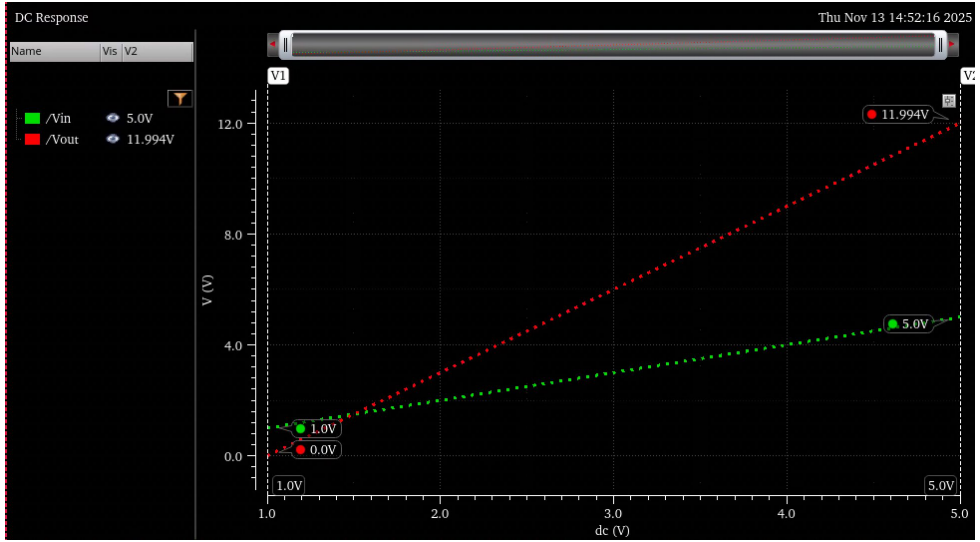

Testing differential-mode gain

- $V_{out} = (V_1 - V_2)(1+2R/R_{gain})$
  $= (V_1 - V_2)(3)$
- $A_{DM} = 3$
- Simulation results are equal to calculated results.
  - When $V_1 = V_2$: $V_{out} = 0$
  - When $V_1 - V_2 = 4$, $V_{Out} = 12$

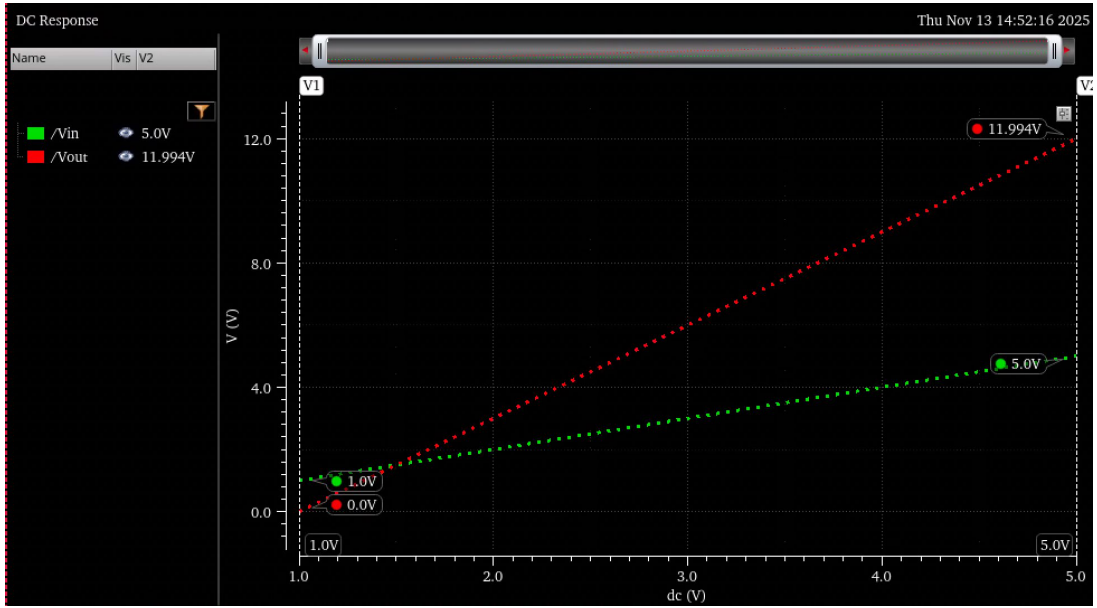

Testing common-mode gain

- Providing the same voltage to both inputs
- Expectation: $V_{out} = 0$ because $V_1 - V_2 = 0$
  - $A_{CM} = 0$

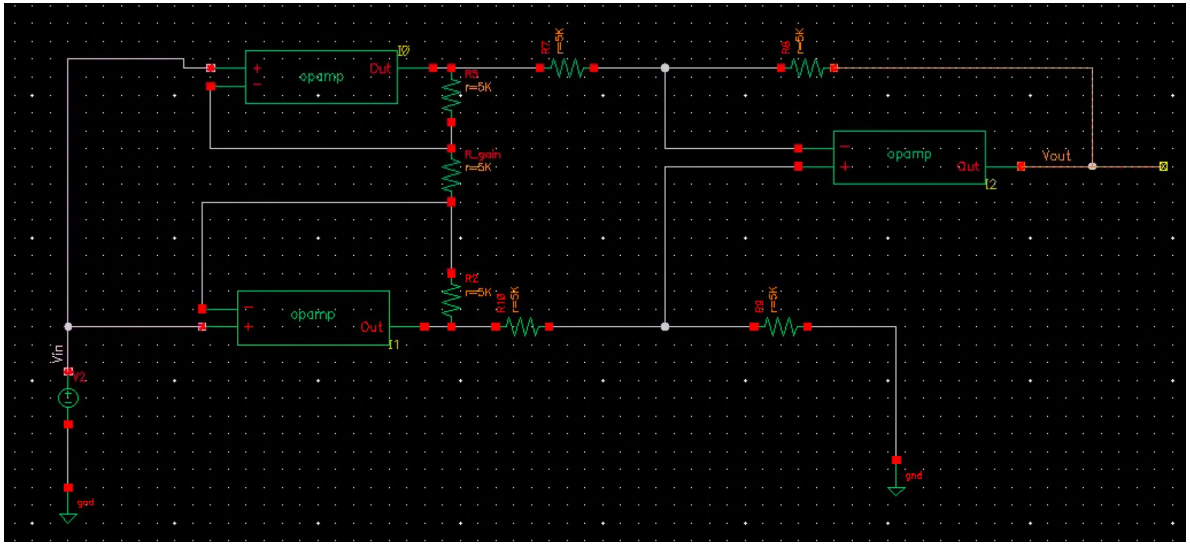

Testing common-mode gain

- Expectation: $V_{out} = 0$ because $V_1 - V_2 = 0$
- Results: $V_{out} = 0$

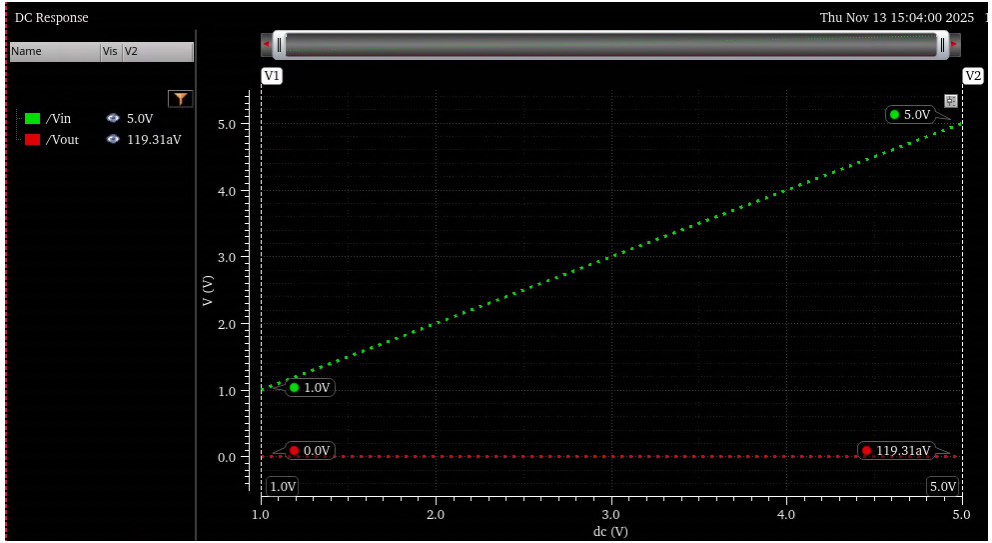

CMRR

- Combining both the differential mode and common-mode examples:
  - CMRR = $20\log(A_{DM}/A_{CM}) = 20\log(3/0) = \infty$ (ideal)

Differential mode

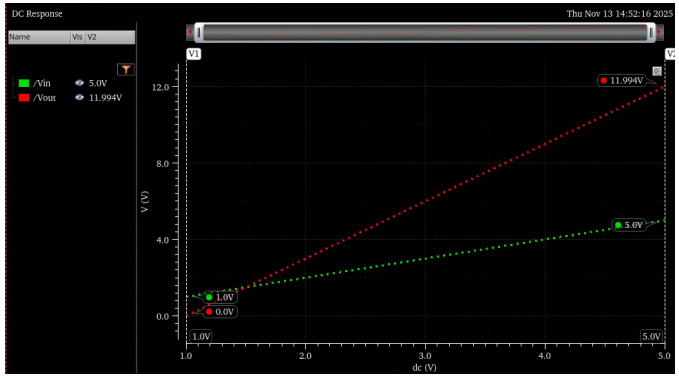

Common mode

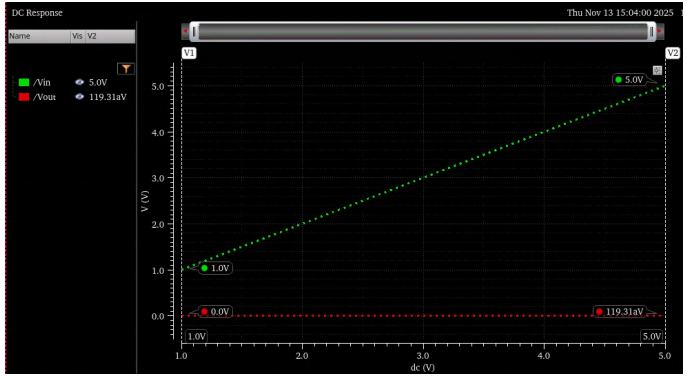

Another calculation of CMRR (with a common-mode and differential-mode input)

- $R = R_{gain} = 8\ k\Omega$: $V_{out} = (V_1 - V_2)(1+2R/R_{gain}) = (V_1 - V_2)(3)$
- For a differential amplifier in general:
  - $V_{out} = A_{dm} vi_{i,\ dm} + A_{CM} V_{I,\ CM}$
- Simulation with $V_{CM} = 3$ V and sweeping $V_1 - V_2$ from 0 to 4 V

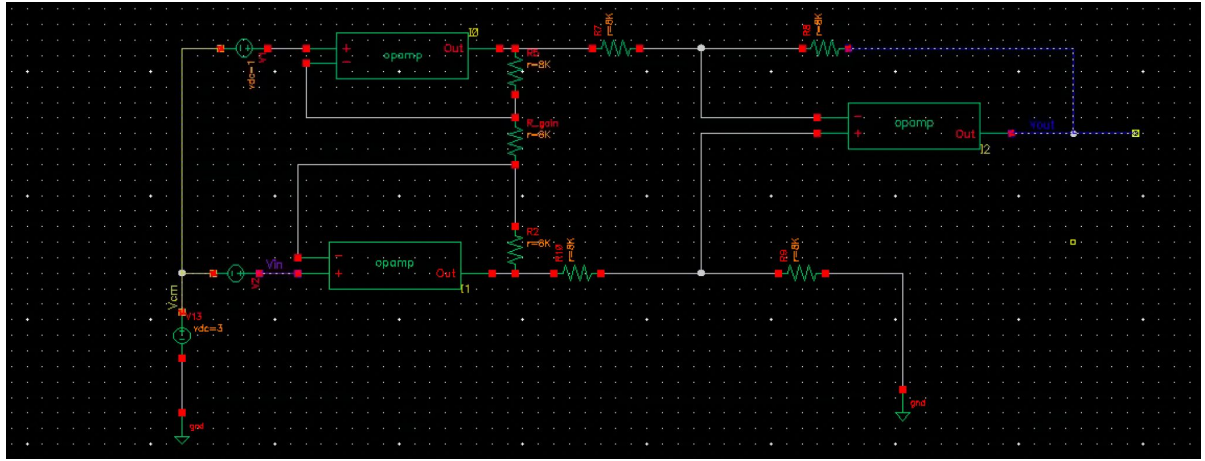

Another calculation of CMRR (with a common-mode and differential-mode input) (continued)

- For a differential amplifier in general: $V_{out} = A_{dm} vi_{i,\ dm} + A_{CM} V_{I,\ CM}$
- Simulation with V_{CM} = 3 V and sweeping V_1 - V_2 from 0 to 4 V
- From the graph: V_{out} is still equal to $(V_1 - V_2)(1+2R/R_{gain}) = (V_1 - V_2)(3)$

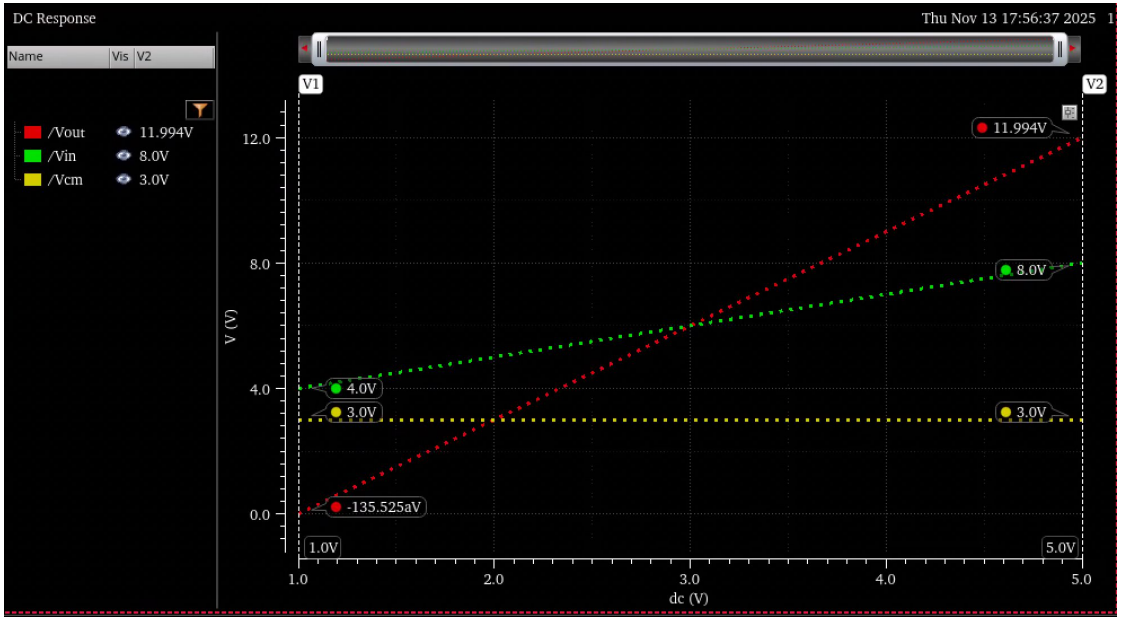

Adjusting R_{gain}

- $V_{out} = (V_1-V_2)(1+2R/R_{gain})$
  - V_{out} can be adjusted by varying R_{gain}
- One input is 1 V and the other input is swept from 1 V to 5 V
- Using R = 8k and varying R_{gain}:
- Expected values
  - R_{gain} = 2 kΩ: $V_{out} = (V_1-V_2)(9)$
  - R_{gain} = 4kΩ: $V_{out} = (V_1-V_2)(5)$
  - R_{gain} = 8kΩ: $V_{out} = (V_1 - V_2)(3)$

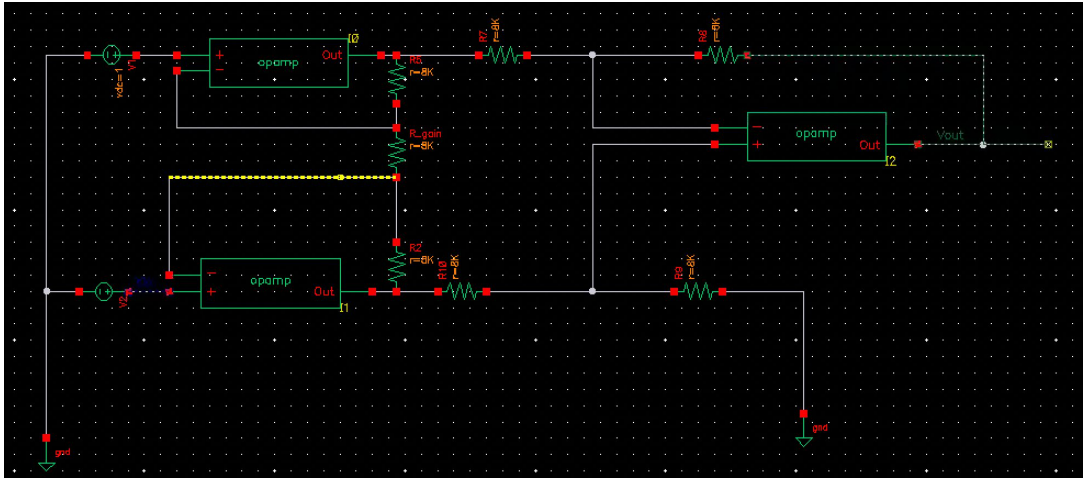

Adjusting R_{gain}: R_{gain} = 2kΩ

- One input is 1 V and the other input is swept from 1 V to 5 V
- R_{gain} = 2 kΩ: $V_{out} = (V_1 - V_2)(9)$
- Expected value is the same as the simulated value:
  - At 1 V: $V_{out} = (0)(9) = 0$ V
  - At 5 V: $V_{out} = (4)(9) = 36$ V

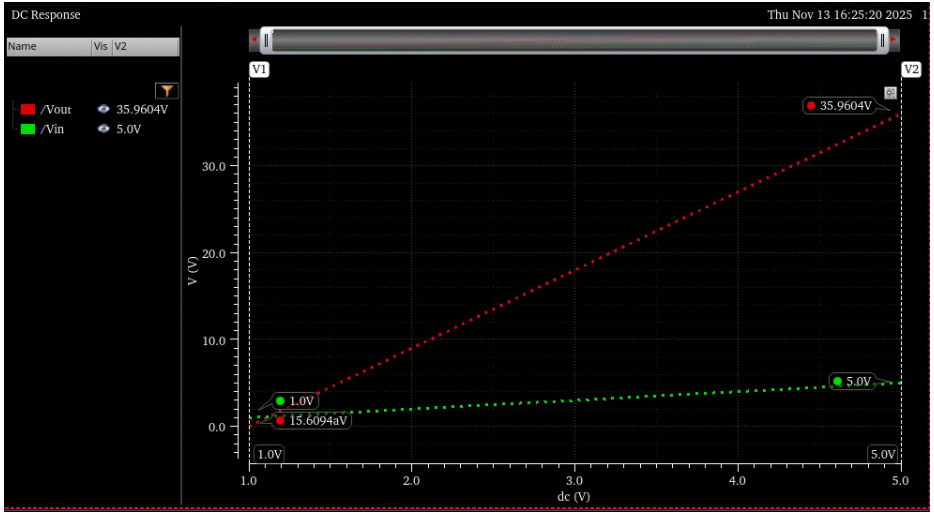

Adjusting R_{gain}: R_{gain} = 4kΩ

- One input is 1 V and the other input is swept from 1 V to 5 V
- R_{gain} = 4 kΩ: $V_{out} = (V_1 - V_2)(5)$
- Expected value is the same as the simulated value
  - At 1 V: $V_{out} = (0)(5) = 0$ V
  - At 5 V: $V_{out} = (4)(5) = 20$ V

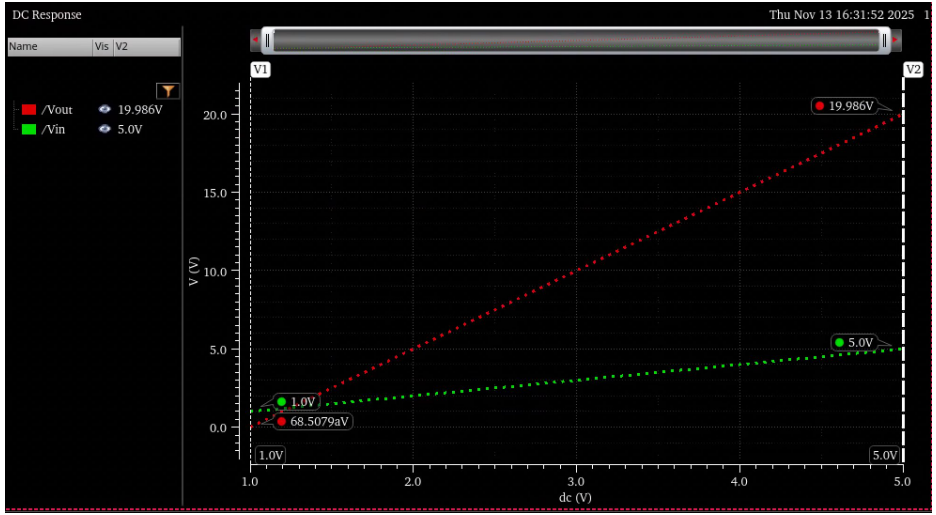

Adjusting R_{gain}: R_{gain} = 8kΩ

- One input is 1 V and the other input is swept from 1 V to 5 V
- Expected: R_{gain} = 8kΩ: $V_{out} = (V_1 - V_2)(3)$
- Expected value is the same as the simulated value
  - At 1 V: $V_{out} = (0)(3) = 0$ V
  - At 5 V: $V_{out} = (4)(3) = 12$ V

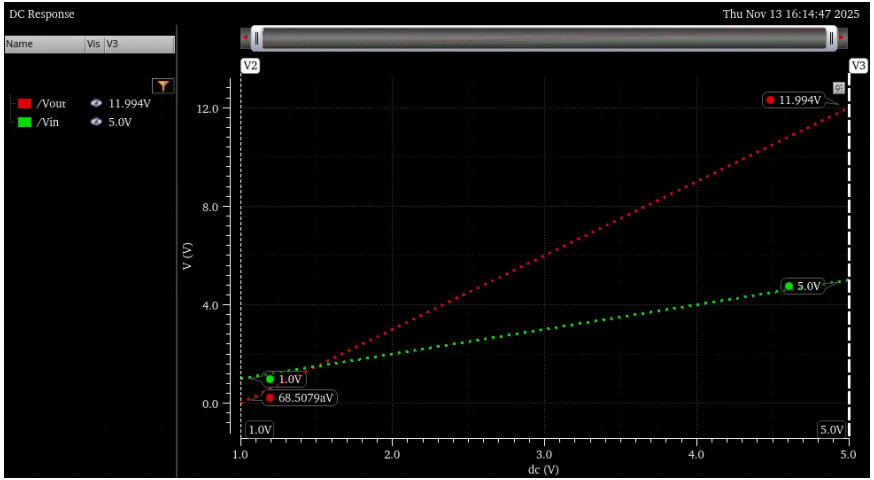

Differential Amplifier Schematic and Symbol

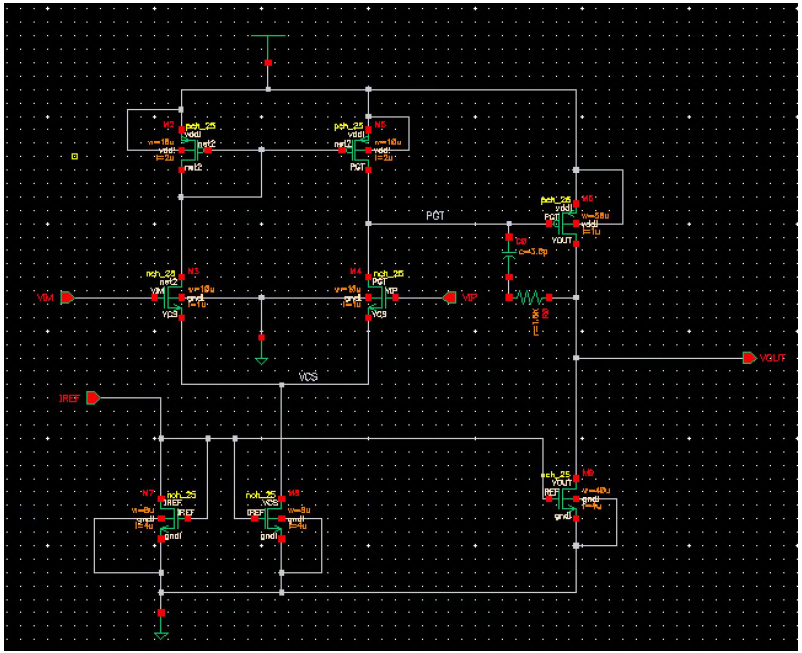

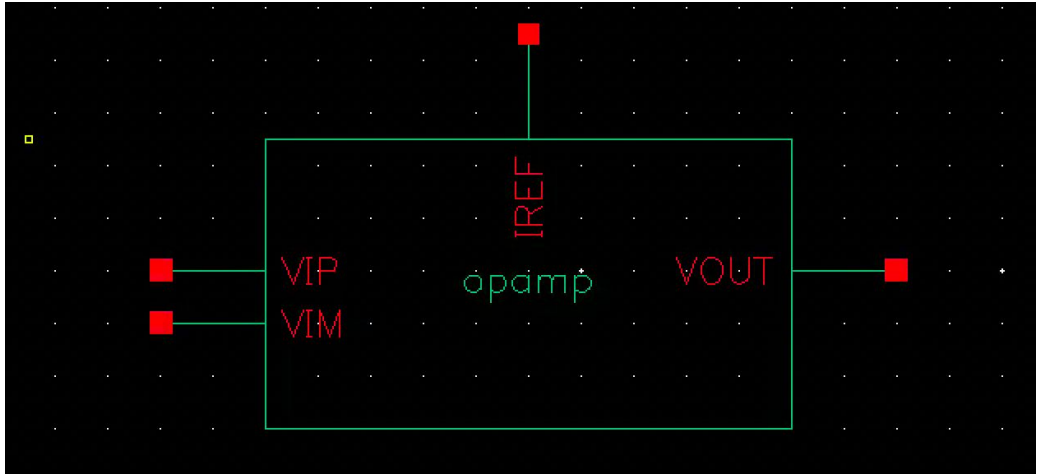

Replacing Ideal Op-Amps with Realistic Op-Amps

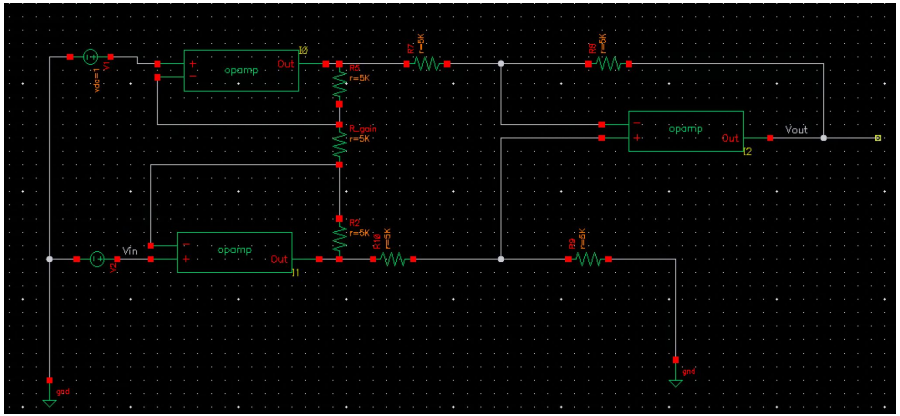

→

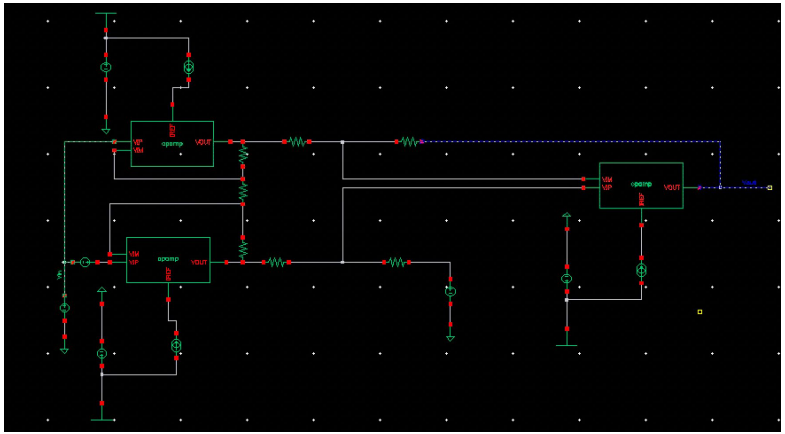

Offset Voltage

- Voltage of $V_{DD}/2$ (equal to 1.25 V) added to replace ground (circled on the diagram) to counteract the offset of the common-mode output (schematic shown on next slide)

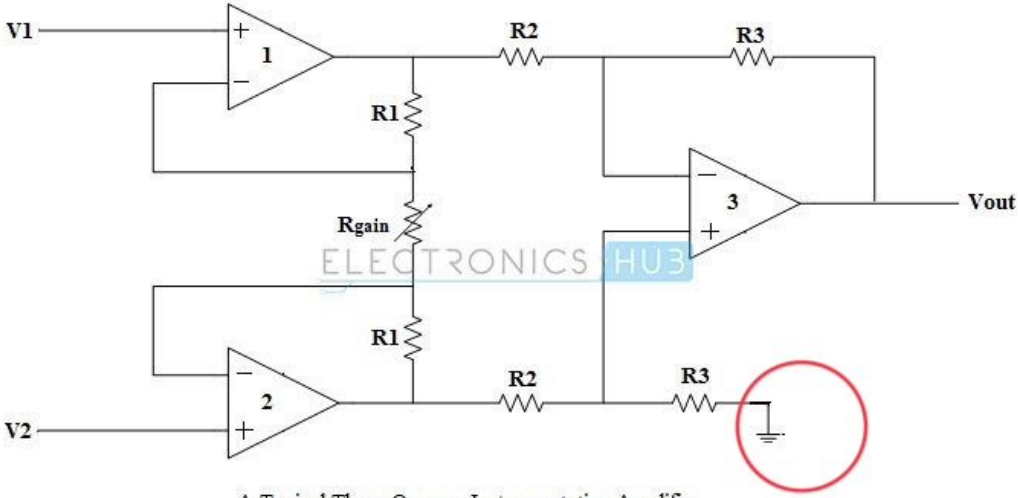

A Typical Three Op-amp Instrumentation Amplifier

Offset Voltage (continued)

Offset voltage circled on schematic

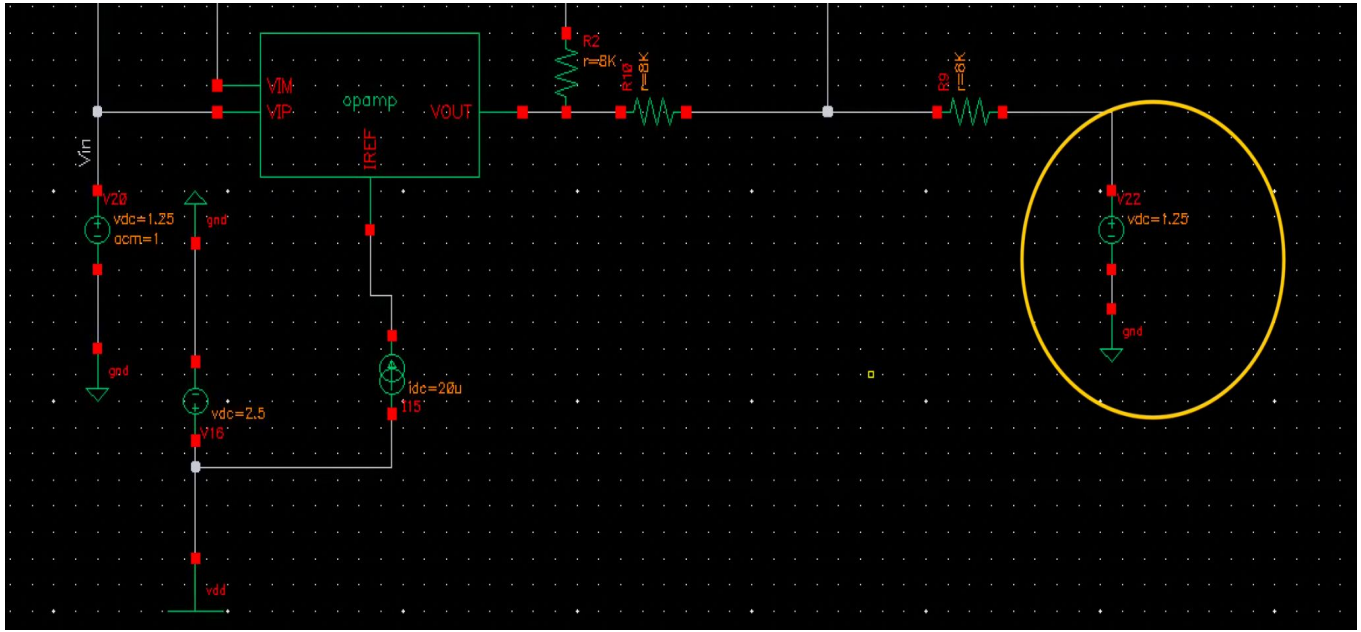

Input Voltage Range

- $v_{I,CM} > V_{ov,5} + V_{GS,0}$
  - (Saturation) $V_{ov,5} = \sqrt{[(2ID_5)/(k_N'(W/L)_5]} = 0.32\ V$
  - $V_{GS,0} = V_{ov,0} + V_{T,0} = 0.10\ V + 0.50\ V = 0.60\ V$
    - $v_{I,CM} > 0.92\ V$ (minimum value)
- $v_{I,CM} < V_{DD} - V_{SG,3} + V_{T,1}$
  - $V_{DD} = 2.5\ V$
  - (Saturation) $V_{ov,3} = \sqrt{[(2ID_3)/(k_P'(W/L)_3]} = 0.20\ V$
  - $V_{SG,3} = V_{ov,3} + V_{T,3} = 0.20\ V + 0.50\ V = 0.70\ V$
  - $v_{I,CM} < 2.3\ V$ (maximum value)

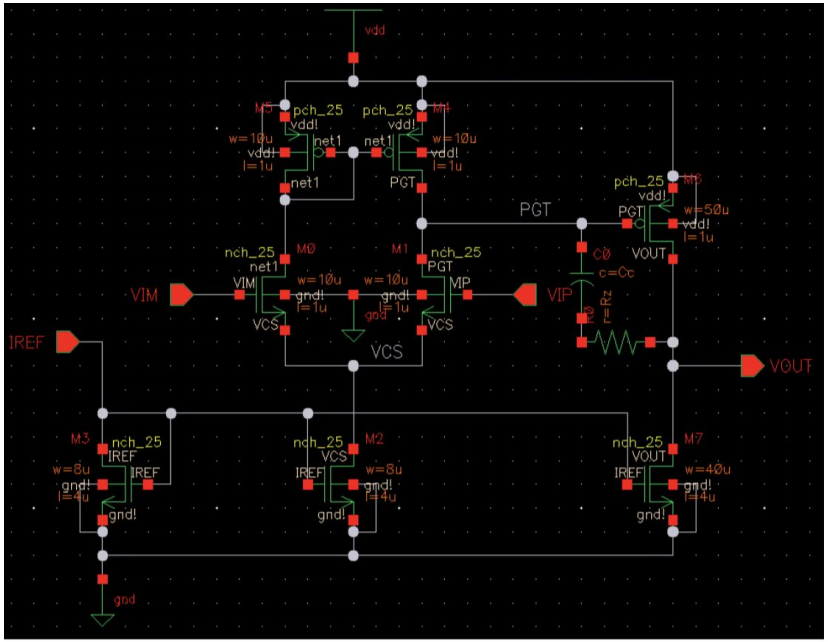

Schematic from Lab 7

Differential Mode Gain

- If all of the resistors besides R_{gain} are the same value R: $V_{out} = (V_1 - V_2)(1+2R/R_{gain})$
- Ideal: $V_1 - V_2 = 100$ mV, $R_{gain} = R \rightarrow V_{out} = (100\text{ mV})(3) = 300$ mV
  - With offset of 1.25 V $\rightarrow V_{out} = (1.55\text{ V})$
- Common-mode signal is swept from 0 V to 2.5 V and V_{out} is graphed

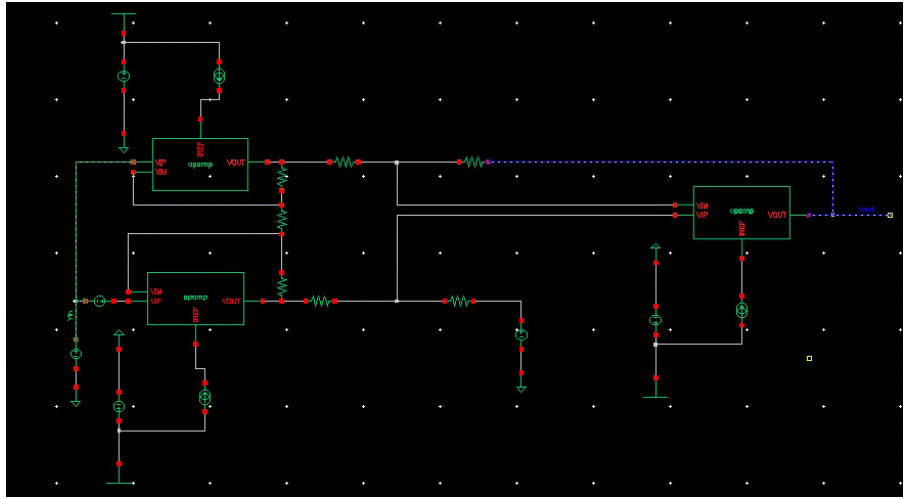

Differential Mode Gain (continued)

- V_{out} = 1.55 V from ~325 mV to ~2.15 V
  - Calculated common mode range: 0.92 V to 2.3 V
  - Non-ideality due to variance in transconductance of MOSFETs and current mirrors not remaining in saturation as the input voltage is lowered

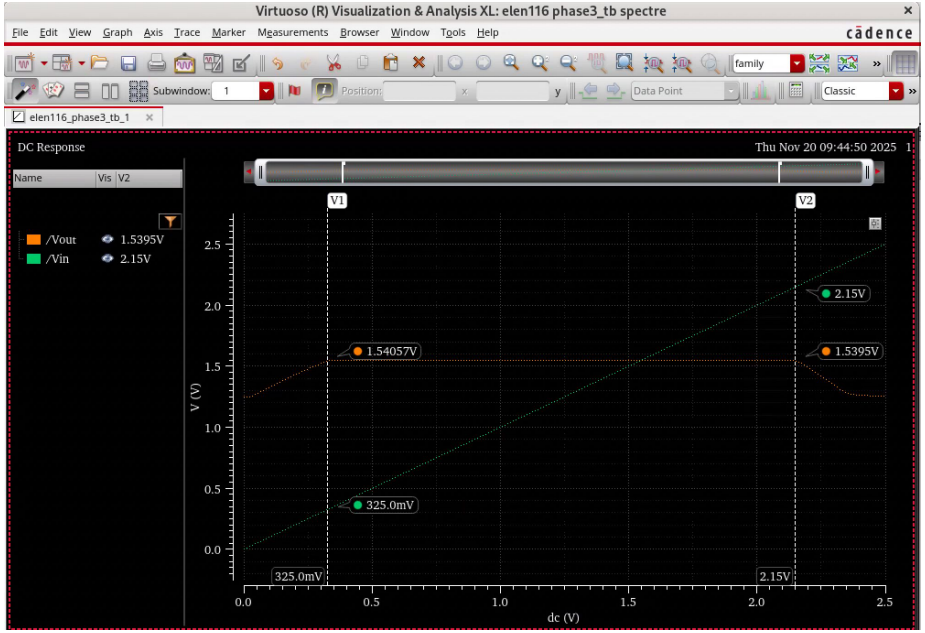

Common-Mode Gain

- Common-mode voltage swept from 0 V to 2.5 V
  - Expected V_{out} = 0 + (offset) = 1.25 V
- Simulation:
  - V_{out} = 1.25 V = Expected V_{out}

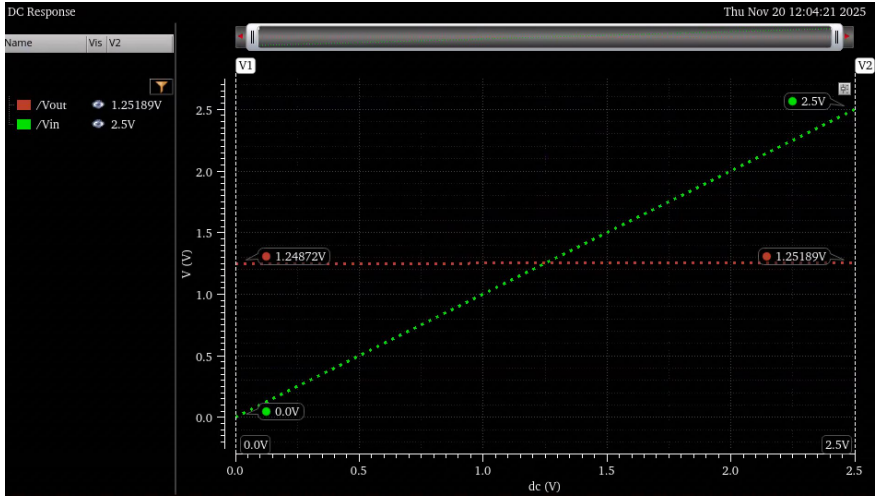

Common-Mode Gain vs. Frequency

- Common-mode input with DC voltage = 1.25 V and AC magnitude of 1 V
    - AC simulation with frequency swept from 1 Hz to 1 GHz

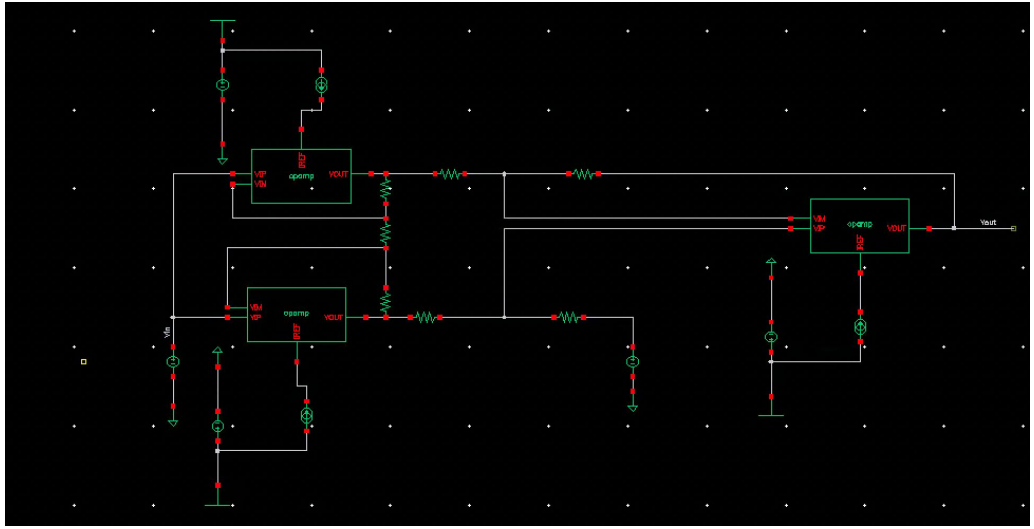

Common-Mode Gain vs. Frequency (continued)

- Common-mode input with DC voltage = 1.25 V and AC magnitude of 1 V
  - AC simulation with frequency swept from 1 Hz to 1 GHz
- Simulation: Input and output are plotted in log scale
  - V_{out} = 0 from 1 Hz to ~10 kHz
  - Real op-amps have finite CMRR that decreases with frequency. In our AC sweep, we reject CM signals up to ~10 kHz, after which internal pole locations in the input stage reduce CMRR. This effect is absent in the ideal Phase 2 model.

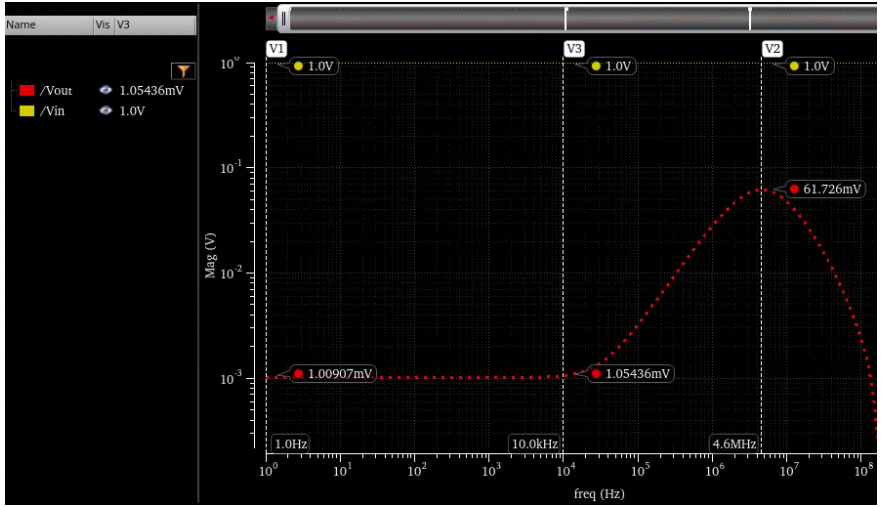

Transient Simulation

- Conditions:
  - Connecting load capacitor of 1 pF to output (circled on schematic)
  - Differential input = pulse wave from 0 V to 100 mV with a 10μs period, 1 ps rise time, 1 ps fall time, and a pulse width of 5 μs (50% duty cycle with 10 μs period) (circled on schematic)

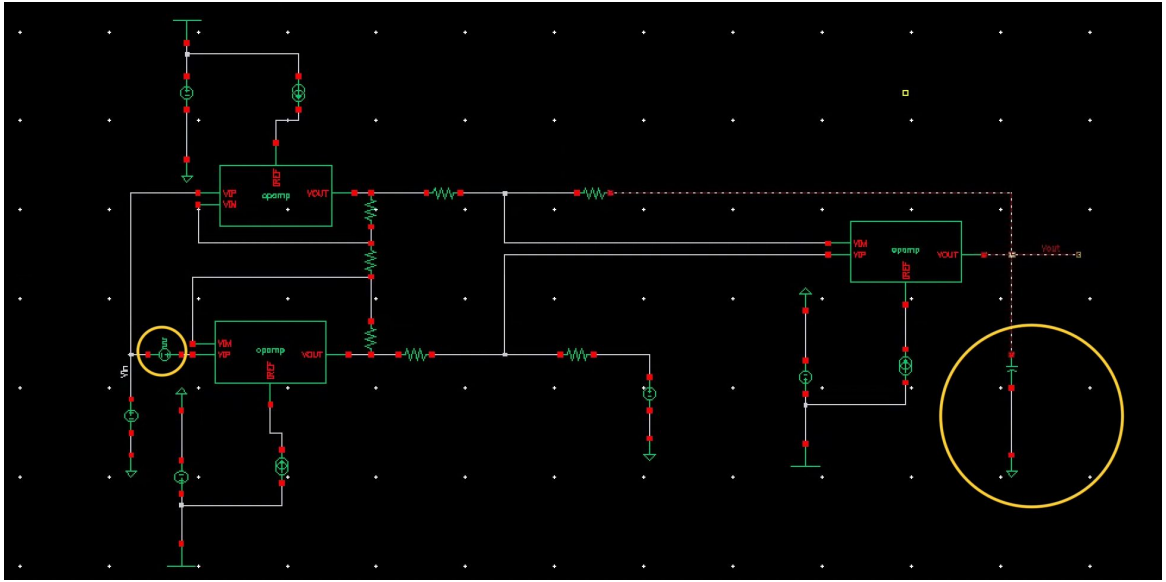

Transient Simulation: Settling Time (continued)

- Settling time (time for output to rise from 10% to 90% of final value)
  - Settling time ~ 253 ns
- The 253ns settling time confirms internal compensation capacitors introduce limited speed, and confirm finite slew rate. This is not an issue for ideal op-amps.

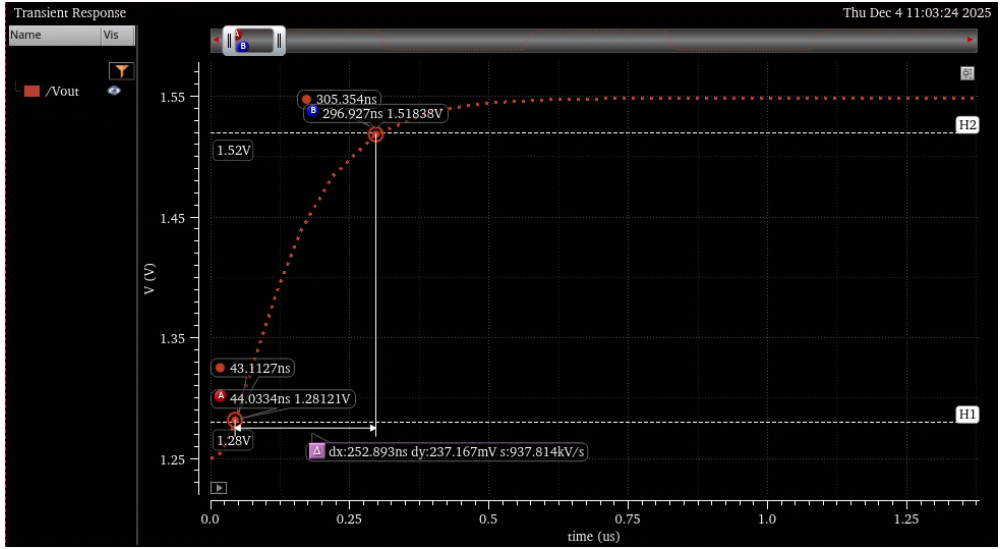

Transient Simulation: Slew Rate

- SR = Slew Rate = slope of V_{out} vs. time between 10% and 90% of V_{out} final value
  - $SR_{expected} = I_{TAIL}/C_C = (20\ \mu A)/(3.5\ pF) = 5.71\ V/\mu s$
  - $SR_{simulation}$ = slope from 10% to 90% of final value = .938 V/μs
  - This difference is likely due to additional parasitic capacitances and that not all tail current is available to charge the compensation capacitor

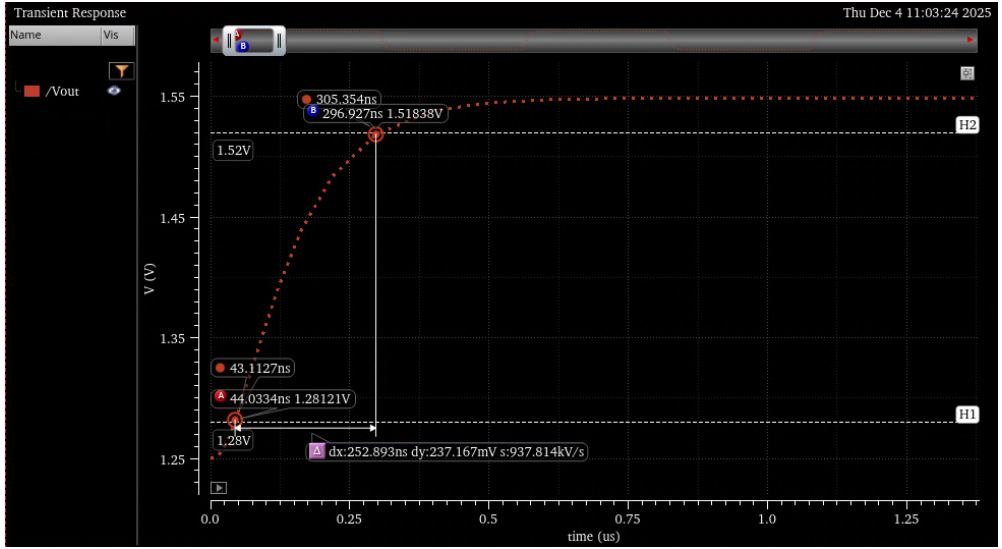

Conclusions

- The ideal instrumentation amplifier behaved exactly as theory predicts, showing perfect common-mode rejection and a programmable differential-mode gain controlled by R_{gain}
- When replacing ideal op-amps with our real two-stage CMOS design, performance became limited by input common-mode range and finite CMRR at higher frequencies
- Adding a mid-supply offset (VDD/2) allowed the real amplifier to operate in its valid input range and restored correct differential-mode behavior
- Transient and AC simulations revealed practical constraints such as limited slew rate, finite bandwidth, and saturation effects
- Overall, our design improvements ensured stable operation, and the results closely matched theoretical expectations across all major performance metrics.

Sources

- https://www.electronicshub.org/instrumentation-amplifier-basics-applications/
- https://www.allaboutcircuits.com/textbook/semiconductors/chpt-8/the-instrumentation-amplifier/#:~:text=What%20Is%20an%20Instrumentation%20Amplifier,adjustment%20of%20multiple%20resistor%20values
- https://www.allaboutcircuits.com/technical-articles/practical-uses-of-instrumentation-amplifiers/
- https://www.youtube.com/watch?v=INeLsIoHw7A

Lessons Learned Post-Presentation

- To properly measure slew rate, we should've measured the greatest instantaneous rate of change instead of 10% to 90%
- Also for the slew rate measurements, we should've had a greater voltage swing to properly slew, and therefore greater change from $Vout_{initial}$ vs $Vout_{final}$
- Maybe emphasize more why the instrumentation amplifier is better than alternatives like the differential amplifier (instrumentation rejects more noise and thus is better in noisy environments)
- Discussion of how the error in resistances of resistors affect gain (A), as $A = (1+2R/R_{gain})$